FP-108EX

172x150x51mm MARS

FP-108E

172Øx51mm

DESIGN FEATURES

*BEARING SYSTEM: SLEEVE BEARING & BALL BEARING
*IMPELLER: PLASTIC WITH FIBER GLASS FILLED UL 94V-0
*HOUSING: DIE CAST ALUMINUM PAINTED BLACK OR NATURAL COLOR
*MOTOR: SHADED POLE, IMPEDANCE PROTECTED
*CONNECTING: TERMINAL & WIRE LEADS
*SPEED: S-1 HIGH SPEED TYPE
S-2 MEDIUM SPEED TYPE
S-3 LOW SPEED TYPE
*OTHER VOLTAGE: 24 ,48, 100, 380AC (50/60Hz) ARE AVAILABLE

DIMENSIONS:MM

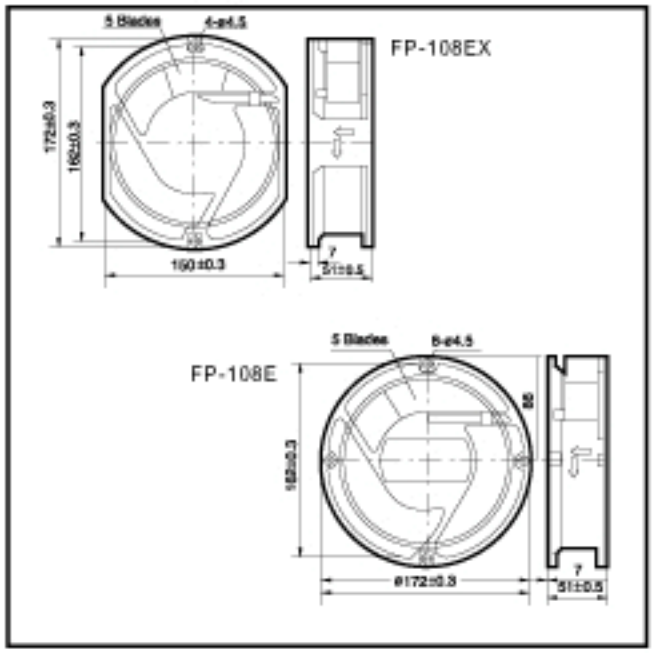

PERFORMANCE

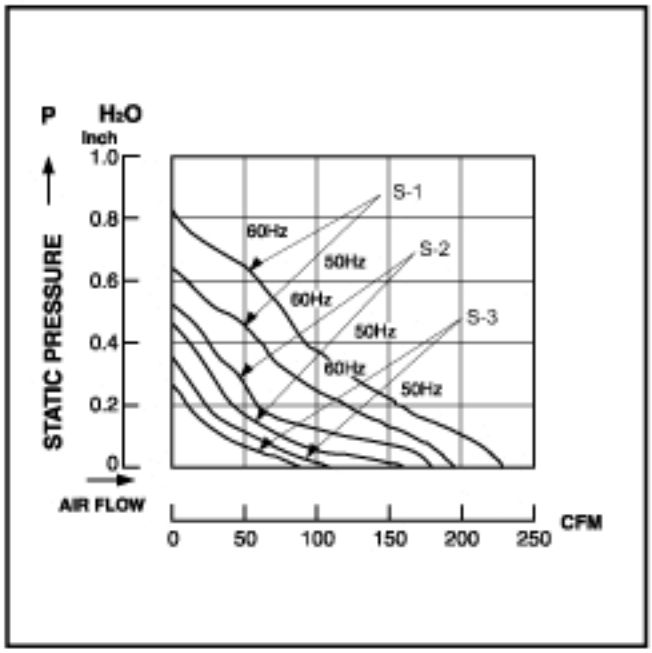

SPECIFICATIONS

Specifications are subject to change without notice

MODEL NO.	VOLT (VAC)	FREQUENCY (HZ)	AIR (CFM)	VOLUME (M^3/MIN)	CURRENT (A)	POWER (W)	SPEED (RPM)	STATIC PRESSURE (INCH-H_2O)	NOISE (dBA)
FP-108EX (S-1) FP-108E (S-1)	110/120	50/60	190/235	5.40/6.6	0.50/0.45	38/35	2800/3100	0.63/0.79	50/45
FP-108EX (S-1) FP-108E (S-1)	220/240	50/60	190/235	5.40/6.6	0.23/0.21	32/31	2800/3100	0.63/0.79	50/45
FP-108EX (S-2) FP-108E (S-2)	110/120	50/60	165/170	4.70/4.8	0.42/0.37	29/30	2300/2400	0.51/0.55	38/33
FP-108EX (S-2) FP-108E (S-2)	220/240	50/60	165/170	4.70/4.8	0.18/0.17	27/29	2300/2400	0.51/0.55	38/33
FP-108EX (S-3) FP-108E (S-3)	110/120	50/60	110/106	3.10/3.0	0.35/0.33	22/21	2100/1900	0.40/0.31	33/30
FP-108EX (S-3) FP-108E (S-3)	220/240	50/60	110/106	3.10/3.0	0.15/0.12	22/19	1900/1800	0.40/0.31	33/30