AL4002A (40 CHARACTERS x 2 LINES)

FEATURES

- 5 x 7 DOTS WITH CURSOR
- BUILT-IN CONTROLLER (KS0066 OR EQUIVALENT)
- 3.3 V POWER SUPPLY
- 1/16 DUTY CYCLE
- INTERFACE PARALLEL / SPI / I2C

ELECTRICAL CHARACTERISTICS

ITEM		SYMBOL	CONDITION	MIN.	TYP.	MAX.	UNIT
Supply Voltage		V_{DD}-V_{SS}	-	2.4	3.3	3.6	V
Supply Current		I_{DD}	-	-	100	160	mA
Input Voltage	"HIGH" Level	V_{IH}	-	0.7V_{DD}	-	V_{DD}	V
	"LOW" Level	V_{IL}	-	0	-	0.3V_{DD}	V
Output Voltage	"HIGH" Level	V_{OH}	-	0.7V_{DD}	-	V_{DD}	V
	"LOW" Level	V_{OL}	-	0	-	0.3V_{DD}	V

MECHANICAL DATA

ITEM	DIMENSIONS	UNIT
Module Size (W x H x T)	182.0 x 33.5 x 9.7	mm
Viewing Area (W x H)	149.7 x13.5	mm
Character Size (W x H)	3.2 x 5.55	mm
Dot Size (W x H)	0.60 x 0.65	mm
Dot Pitch (W x H)	0.65 x 0.70	mm

BLOCK DIAGRAM

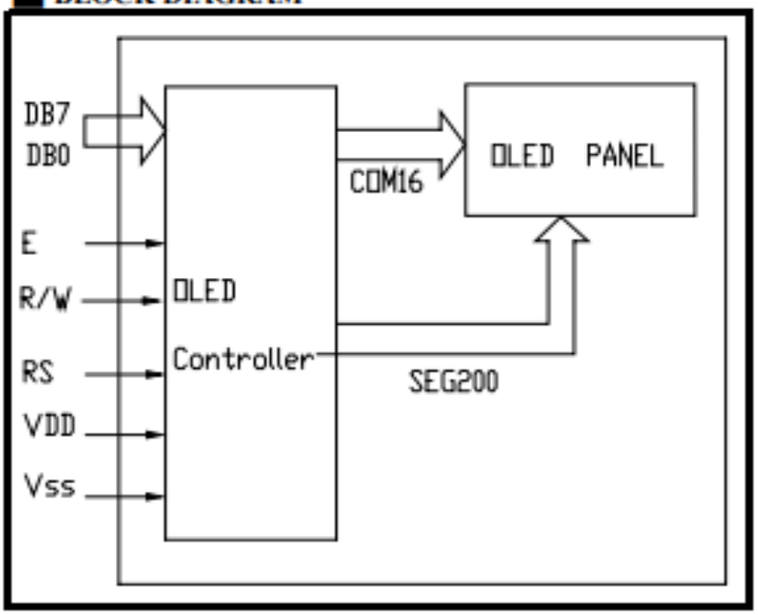

INTERFACE PIN CONNECTIONS

NO.	SYMBOL	FUNCTION	NO.	SYMBOL	FUNCTION
1	Vss	Supply Ground	9	DB2	Data Bit 2
2	VDD	Supply Voltage	10	DB3	Data Bit 3
3	NC	No Connector	11	DB4	Data Bit 4
4	RS	Register Select	12	DB5	Data Bit 5
5	R/W	Read/Write	13	DB6	Data Bit 6
6	E	Enable Signal	14	DB7	Data Bit 7
7	DB0	Data Bit 0	15	NC	No Connector
8	DB1	Data Bit 1	16	NC	No Connector
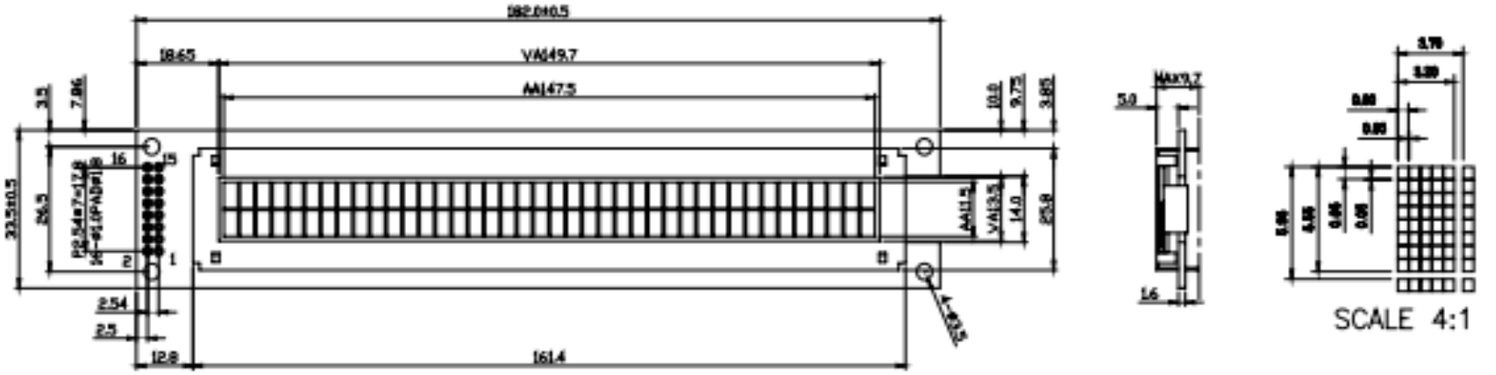
EXTERNAL DIMENSIONS